OERLIKON

Oerlikon 81 mm Rocket Weapon System

A heavy support for the infantry

Universal Rocket Type DIRA

Table of Contents

	Page
1. Introduction	2
2. Military Requirements	3
3. Purpose of the Oerlikon Development	4
Optimum Calibre	5
4. Short Description of the Weapon System	6
4.1. Rockets	6
Shells	7
4.2. Rocket Launcher Type RWK	8
Main technical data of the Rocket Launcher Type RWK	10
5. Comparison	12

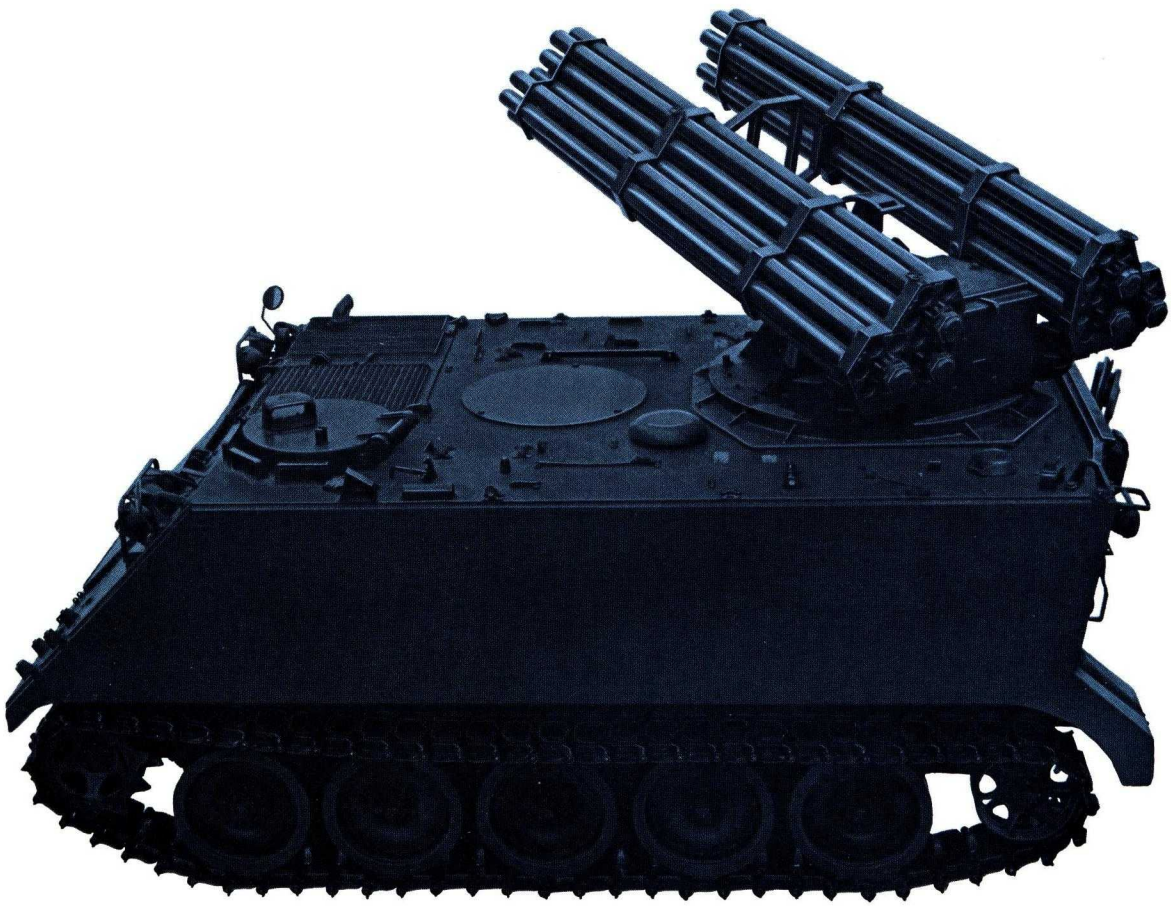

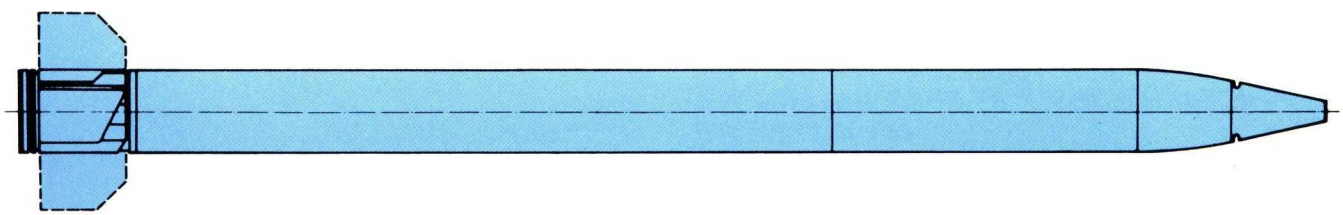

1. Introduction

The Machine Tool Works Oerlikon-Bührle Ltd. Zurich has been successfully active in the field of unguided rockets since 1948.
From the beginning Oerlikon has sold MU-aircraft rockets with fixed fins. It was soon recognized that unguided rockets can also be an effective weapon for ground-to-ground engagement. Depending on the integration-level different requirements result for the range of support weapons:

Application	Range
Battalion and regimental units	up to 7 km
Direct artillery support	up to 15 km
Artillery support of the division	up to 30 km

The following remarks apply only to infantry battalion and regimental units in supporting battle field engagements.
The weapons below are at present available to these units:
- Tank Guns
- Anti-tank Guns
- 8 cm-Mortar
- 12 cm-Mortar

These weapons are suitable against point targets or for harassing fire engagements.

2. Military Requirements

The increasing mechanisation of the armies makes new demands on support weapons:

- They must be mobile to be able to follow the mechanised units
- The firepower must be so great and readily available, that the enemy can effectively be attacked by surprise within 10 to 20 sec. After this time he will have taken cover (Fig.1) or will have traversed the target area (Fig. 2)
- Approx. 50 rounds of 10,5 cm calibre are necessary to cover an area target of approx. 100 x 100 m

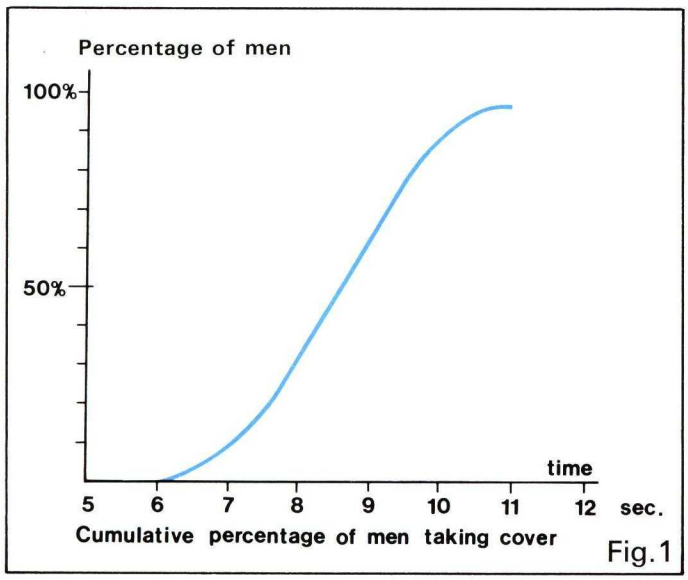

Fig.1

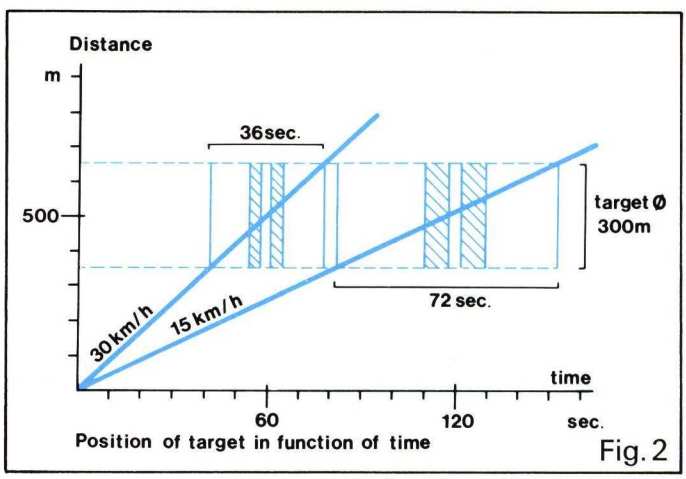

Fig.2

Fig. 1 shows the result of tests in Switzerland. It can be seen, that after approx. 11 sec the enemy has taken cover.

- Support weapons must be available at short notice, in order immediately to combat pockets of resistance, penetrations, bridgeheads, landing grounds etc.
- The ammunition must be effective against armoured and unarmoured targets

3. Purpose of the Oerlikon Development

The following are the main features which formed the basis for the development of an Oerlikon rocket system for ground-to-ground engagement:

- Range approx. 8 km
- Optimum calibre against armoured and unarmoured targets
- Mount capability on high-speed armoured personnel carriers such as M113, i.e. max. payload 1500 kp
- Simple operation, by one man if possible
- Autonomous operation and aiming
- Protected crew

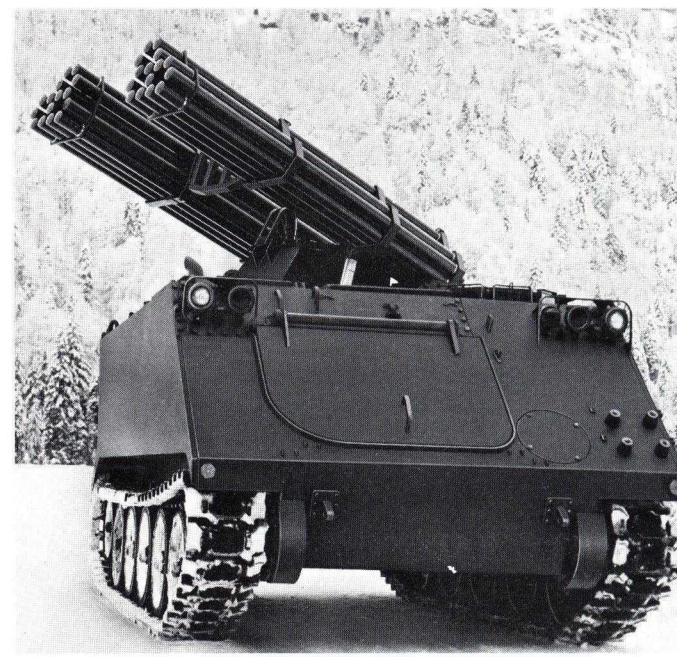

Oerlikon 8 cm multi-tube rocket launcher type RWK-007 on M113 armoured personnel carrier

Oerlikon 8 cm multi-tube rocket launcher type RWK-007 on the MOWAG armoured personnel carrier

Optimum Calibre

The optimisation depends strongly on the type of engagement. This implies that the warheads must be highly efficient against the total spectrum of potential targets. Fig. 3 below shows a spectrum of possible targets.
One may conclude from the above that most potential targets have an equivalent steel thickness of less than 6 mm.
Against such targets warheads with superior blast and fragmentation effects are necessary.
The calibre of 8 cm provides enough volume for the weight of explosive and quantity of fragments necessary to produce a fragment penetration density of one fragment/m^2 at a radius of 20 m. At ranges of 6–8 km and with a 50% dispersion of 10‰ a fragmentation cover radius of 20 m can be achieved.
A smaller calibre would have been sufficient only for hollow-charges, the high fragmentation-density requirement however led Oerlikon to choose calibre 81 mm.

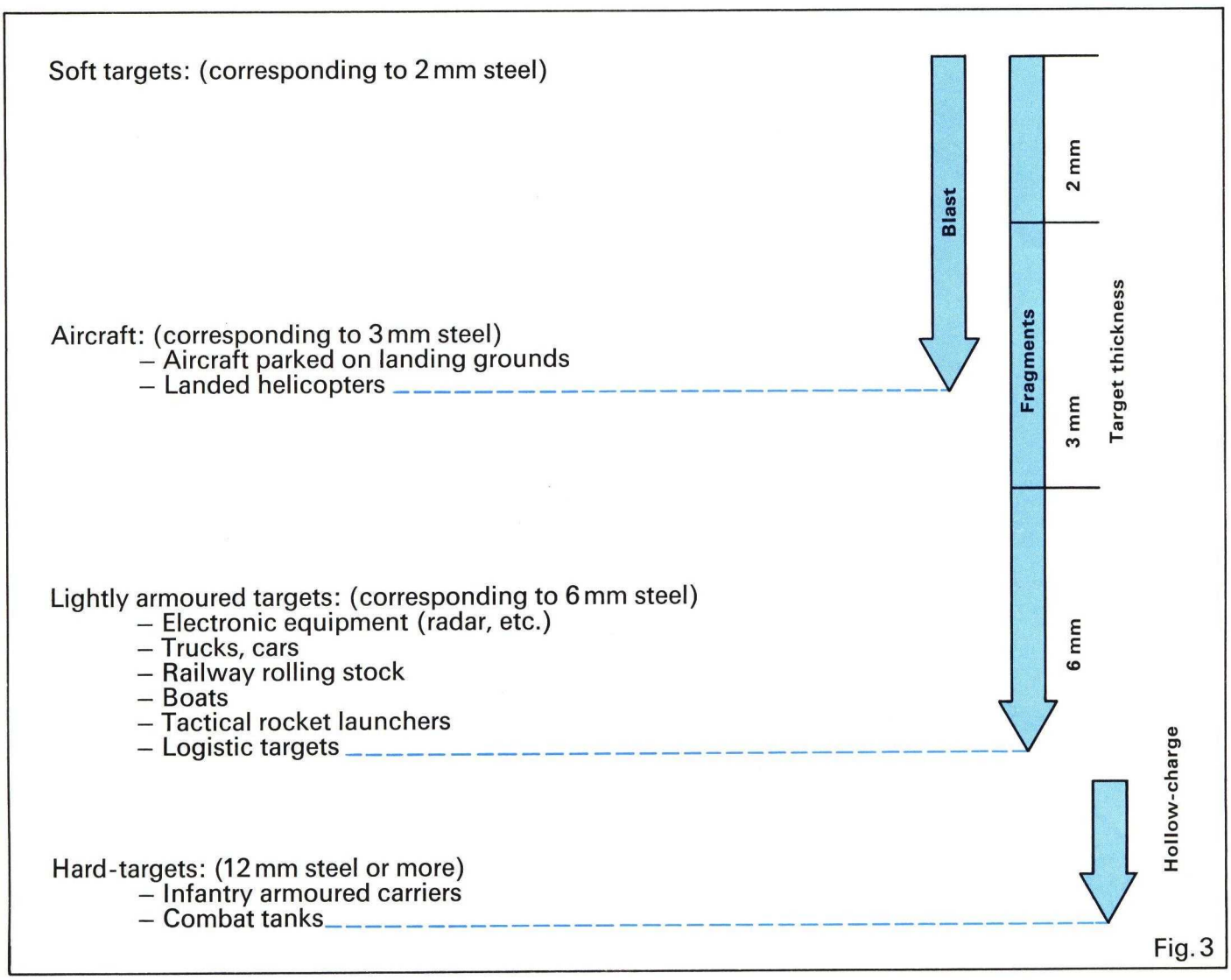

Fig. 3

4. Short Description of the Weapon System

4.1 Rockets

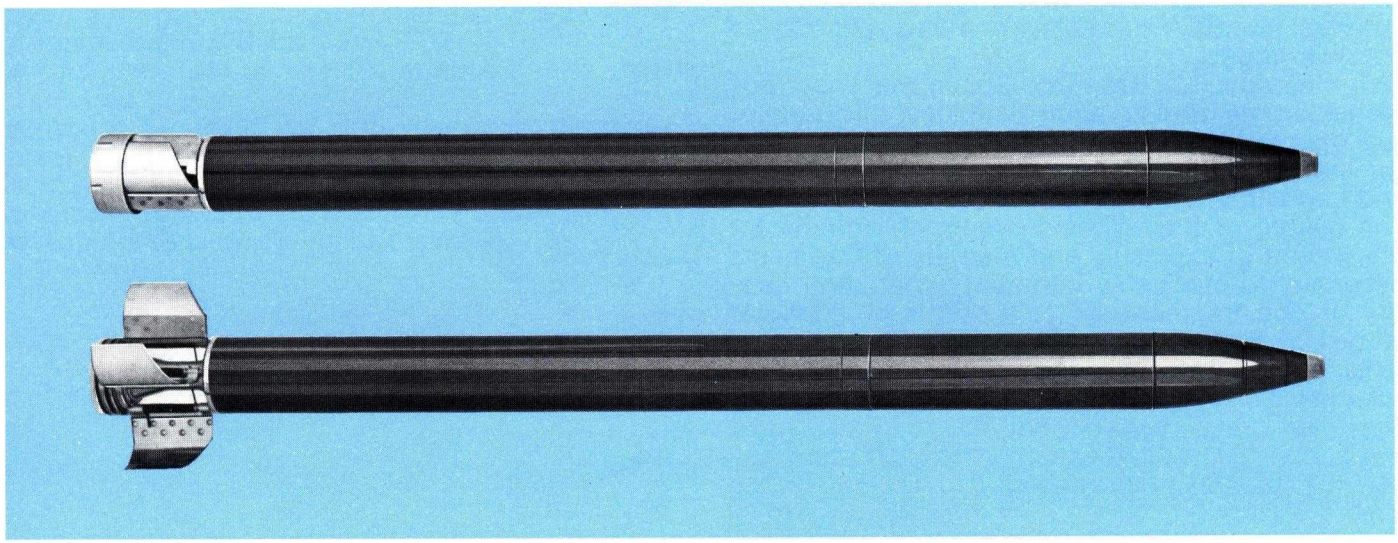

The 81mm Oerlikon rocket type DIRA comprises the following main components:

- Rocket motor with folding fins and solid fuel internal burning motor
- Warhead (7 kp incl. fuze)
- Fuze

The components are interchangeable.

The DIRA is available with the following shells:

• Practice shell (inert)	7 kp
• Marker shell with nose fuze	7 kp
• Fragmentation explosive shell with nose fuze	7 kp
• Hollow-charge warhead with nose/base fuze	3 kp
• Tracer shell with time fuze	7 kp

Main technical data

Diameter of propulsive element	ca.	81 mm
Length depending on shell	ca.	1300 mm
Weight of rocket, ready to fire	ca.	15,65 kp
Range	ca.	8500 m
Mean thrust at +18 °C	ca.	785 kp
Action time at +18 °C	ca.	0,91 sec
50 % dispersion at 8000 m	ca.	10 ‰

Detailed data are given on the datasheets

Trajectory Diagram for Ground-to-Ground Use

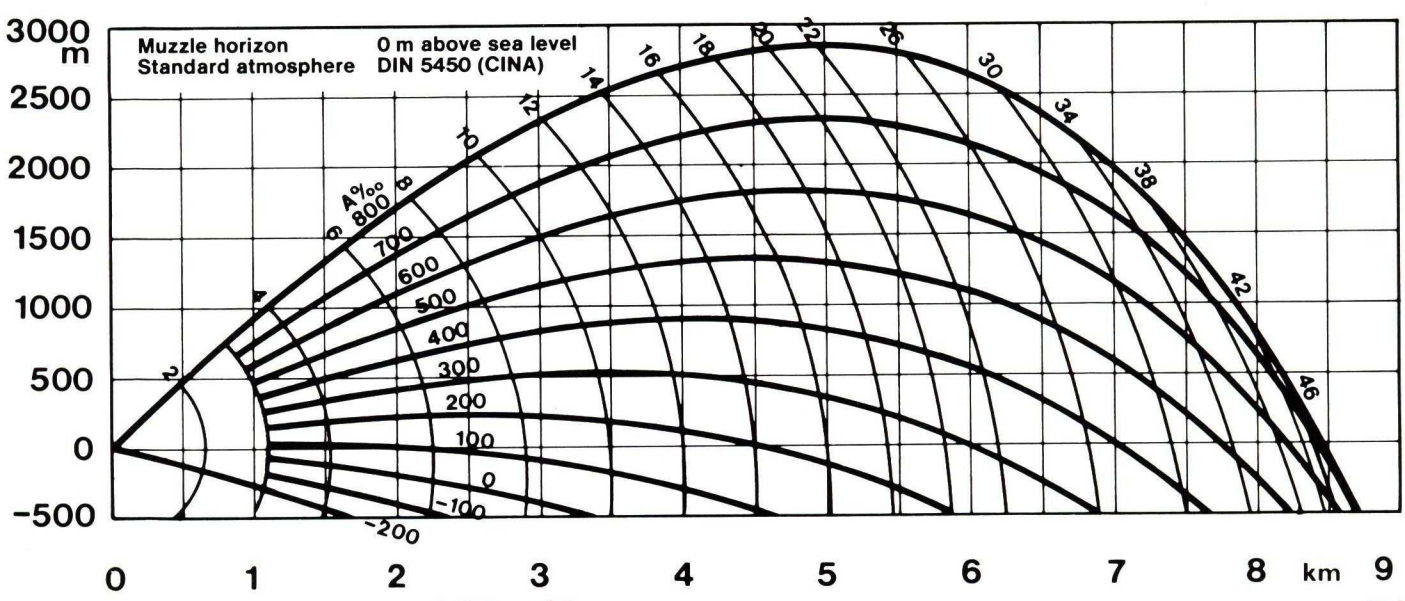

Shells

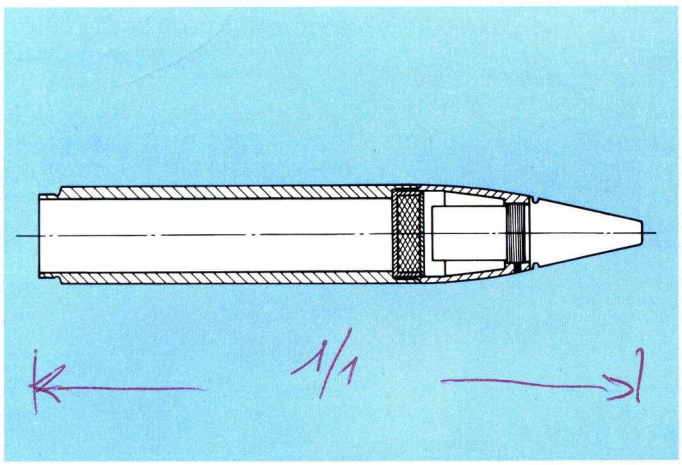

Except for the hollow-charge warhead, the shells for the DIRA rockets have a weight of 7 kp. Lighter shells weighing only 3 kp are also available.

Practice Shell Type UGK 020

The UGK 020 is an inert shell for practice purposes.

Marker Shell Type USK 017

The practice shell USK 017 fitted with nose fuze and fuze booster smoke marker is suitable for practice purposes and target marking.

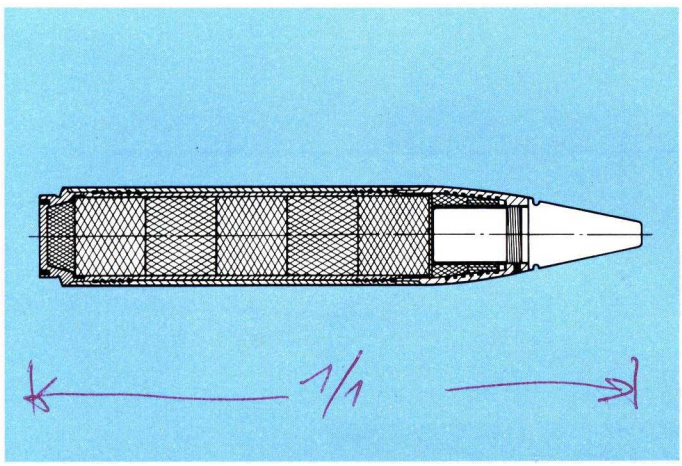

Fragmentation Explosive Shell Type SSK 018

The fragmentation explosive shell type SSK 018 is filled with ca. 2.20 kp explosive which is initiated by a mechanical ignition system employing a nose fuze and safety element.
The SSK 018 is suitable mainly for use against unarmoured or, at the most, lightly armoured area targets such as troop concentrations, vehicle columns, buildings etc.

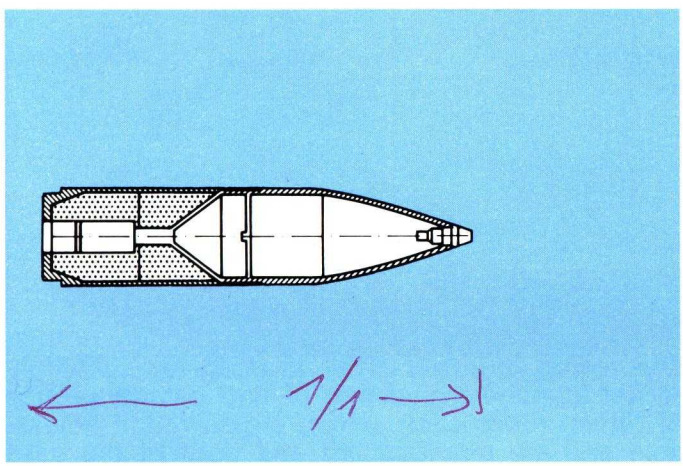

Hollow-Charge Warhead Type PI-3

The PI-3 warhead contains a hollow-charge with a mechanical impact fuze. Due to its high penetration performance, it is particularly suited for use against armoured targets such as armoured vehicles, naval craft, strong point buildings etc.

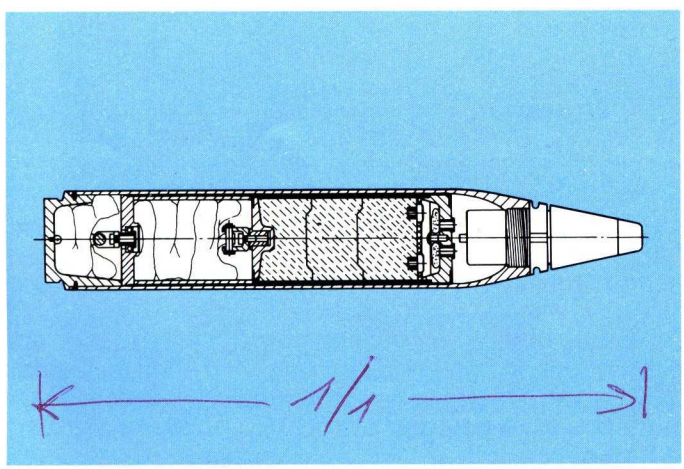

Illuminating Shell Type LGK 019

The LGK 019 illuminating shell has a flare duration of ca. 60 sec for illuminating combat areas and landing areas, and also for target marking.

4.2 Rocket Launcher Type RWK

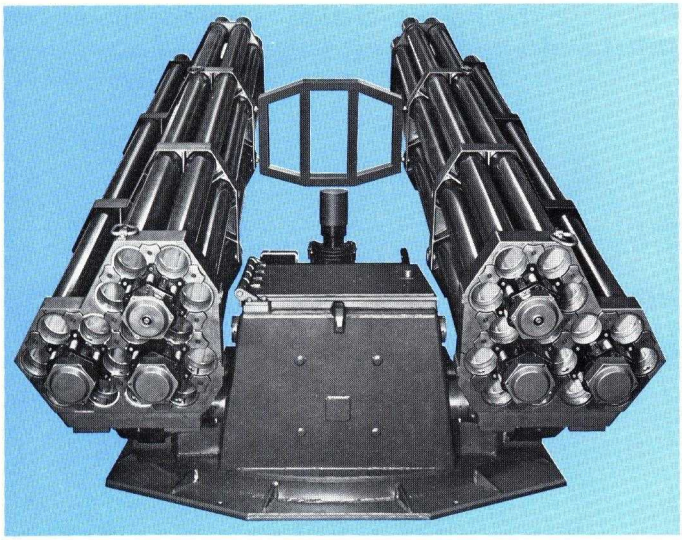

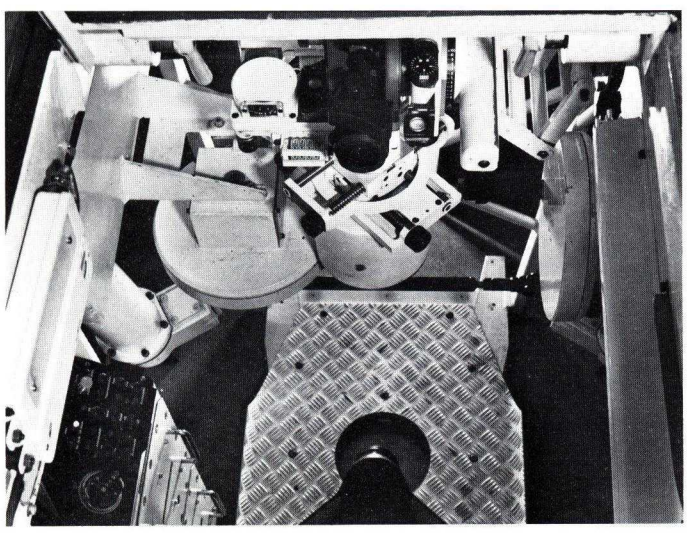

The rocket launcher RWK is a 30-tube multiple rocket launcher consisting of two parallel groups of fifteen tubes each, which are elevation-adjustable and are arranged left and right of the base ring mounting. The latter contains all operating elements for the gunner such as:

- Armoured AC-proof mounting-dome
- Base ring
- Panoramic sight
- Traverse and elevation aiming drive
- Rocket ignition and control box
- Slip ring

The base ring mounting is operated by one gunner. All operations necessary for aiming and firing can be performed by the gunner while protected by the closed hatch.

Dimensions and weights of the RWK launcher are compatible with the armoured personnel carrier M113 (Mortar version). Other armoured personnel carriers with a payload of 1500 kp however are also suitable.

Oerlikon 81mm Rocket Launcher Type RWK-007
on M113 armoured personnel carrier,
mortar version

Weights:

Mounting RLK-003	ca. 650 kp
Multi-Tube Rocket Launcher	ca. 340 kp
30 Rockets Type DIRA	ca. 470 kp
Rocket Launcher ready for action	ca. 1460 kp

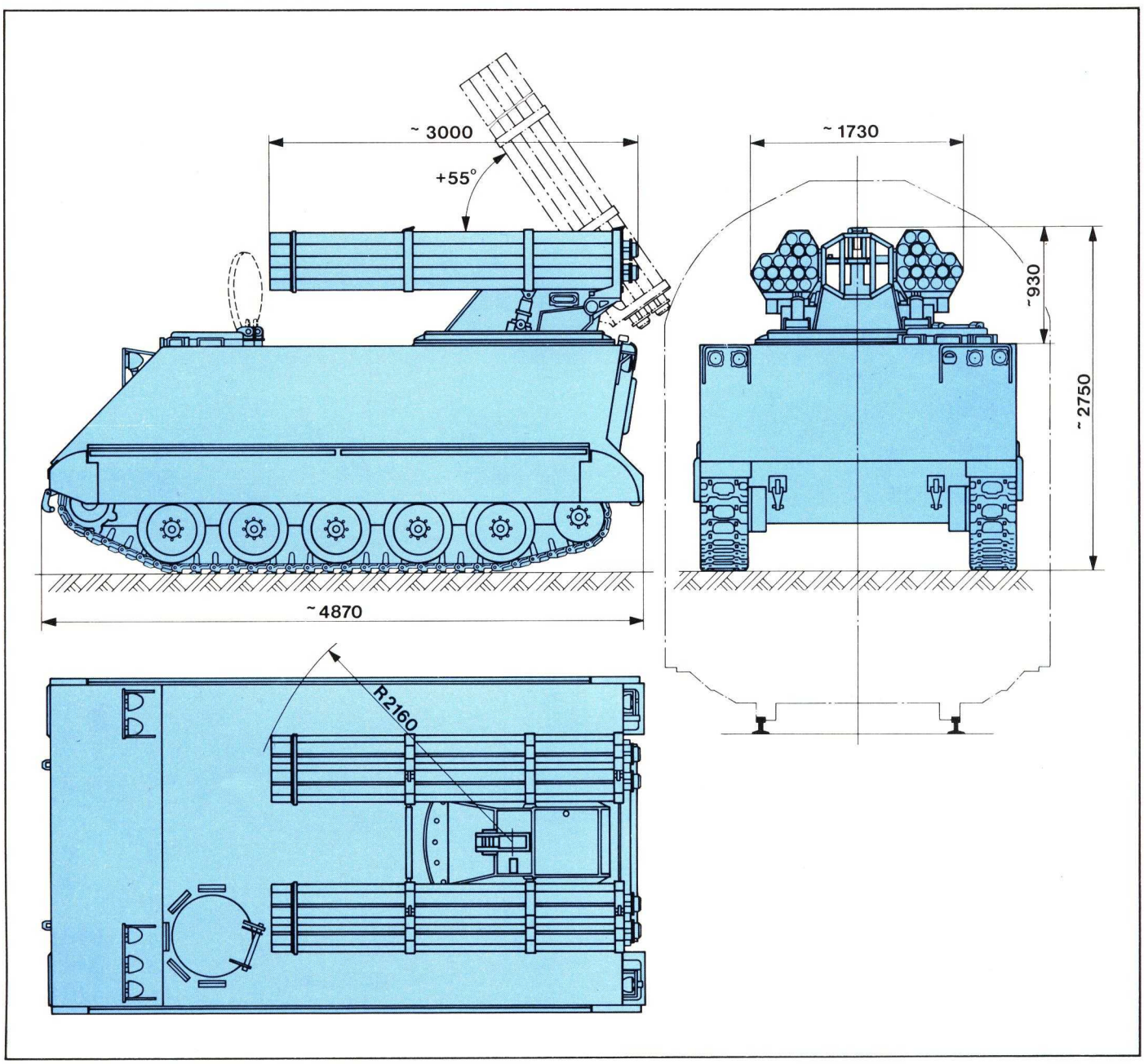

Main technical data of the Rocket Launcher Type RWK

Calibre	81 mm
Number of tubes	30
Length of tubes	ca. 2850 mm
Width of rocket launcher	ca. 1730 mm
Height above base ring	ca. 887 mm
Depth below base ring	ca. 964 mm
Base ring diameter	ca. 1400 mm
Interior pivoting space diameter	ca. 1300 mm
Aiming drive:	
Traverse and elevation	mechanical, hand-driven
Aiming range:	
Traverse	360 °
Elevation	–10 ° to +50 °
Aiming speed:	
Traverse	max. ca. 20 °/sec
Elevation	max. ca. 4 °/sec

Aiming equipment:	
– Panoramic sight with automatic traverse correction for vehicle slant	Rbl F115
– Power	7-fold
– Field of view	9 °
– Night illumination	existing
– Color filter	grey and yellow

Periscope	1
Prism observation slits (Bullet proof glass)	2
Power supply	24 V DC
Duration of fire for one salvo of 30 rockets	ca. 6 sec
Technical reloading time	ca. 3 min
Weight: mounting RLK-003 with 8 mm shielding	ca. 650 kp
Multi-tube rocket launcher 30 rockets type DIRA	ca. 340 kp ca. 470 kp
Weight of rocket launcher ready for action	ca. 1460 kp

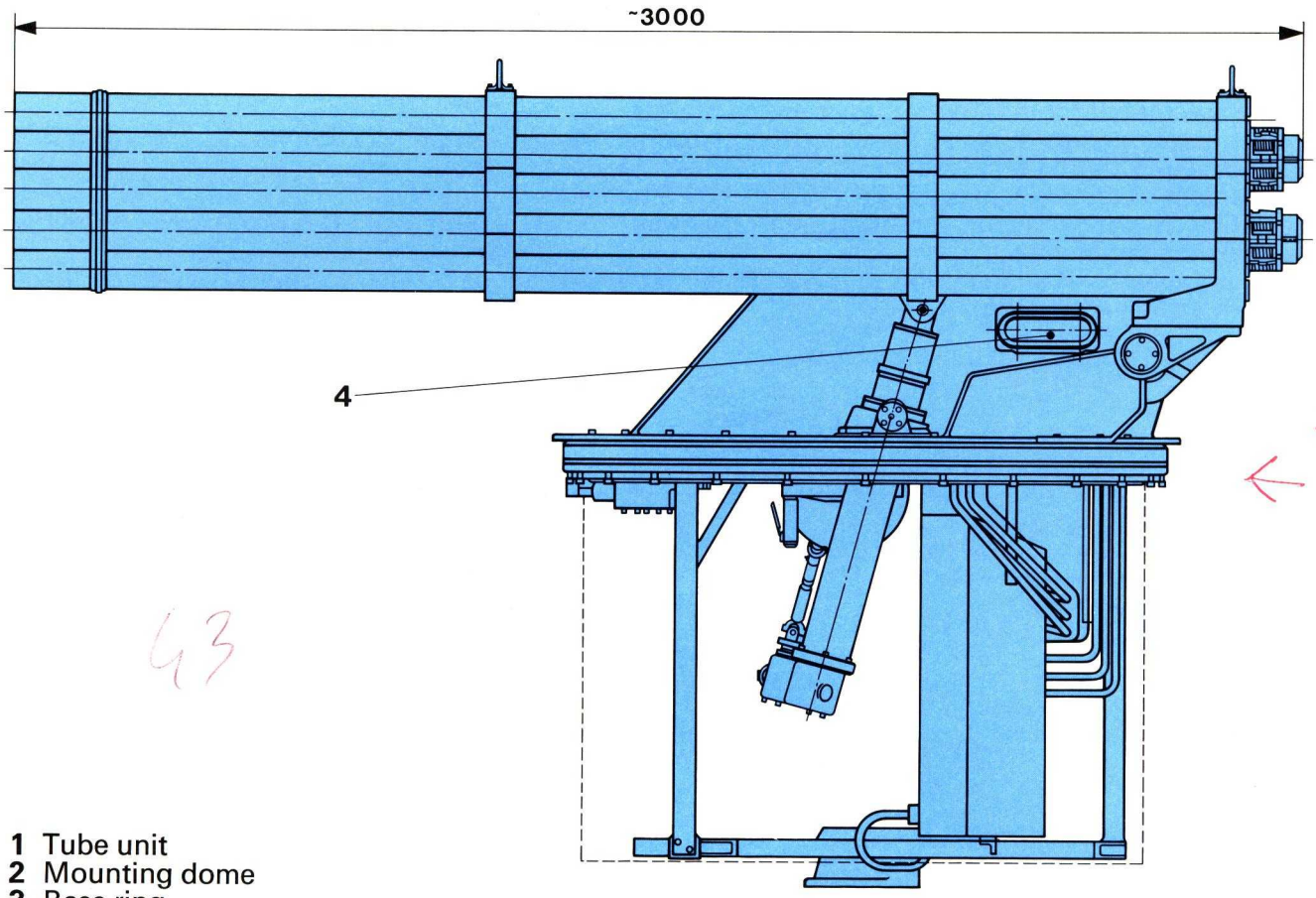

1 Tube unit
2 Mounting dome
3 Base ring
4 Visions blocks
5 Elevation spindle
6 Control unit
7 Electrical slip ring
8 Seat

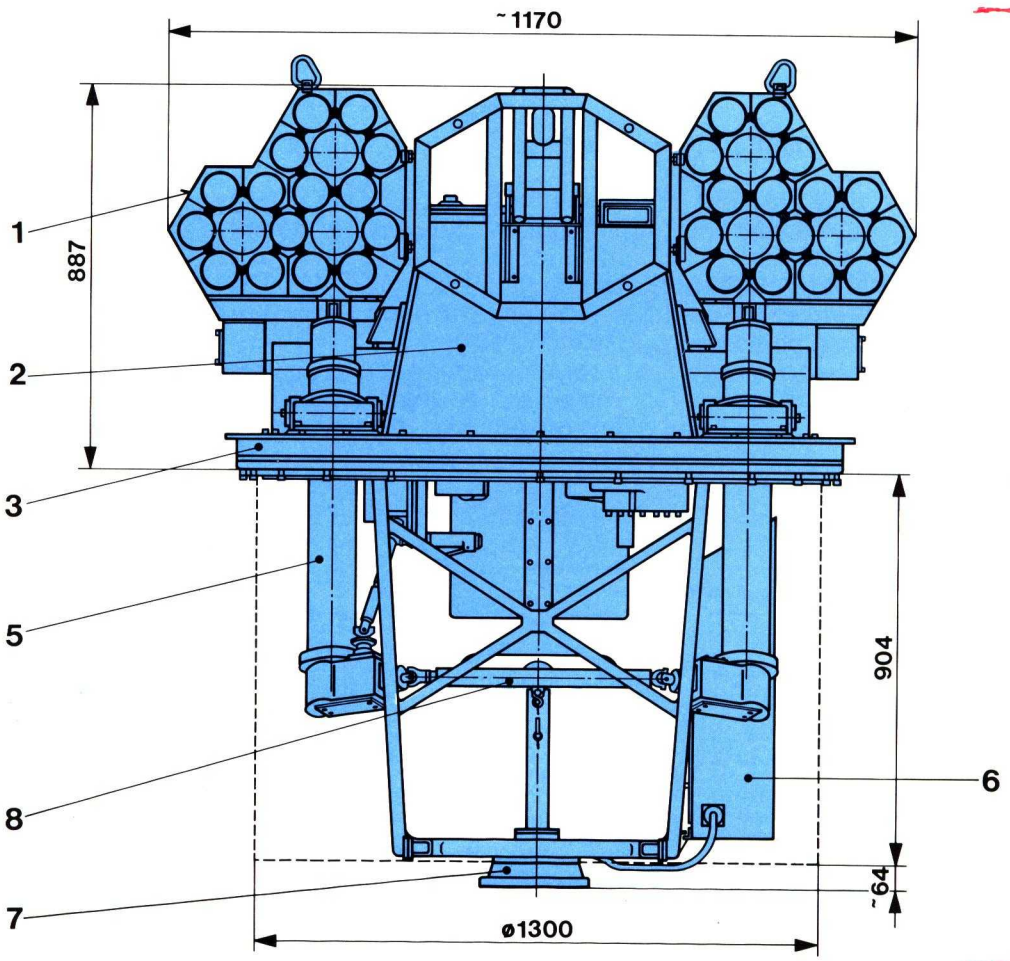

5. Comparison

Comparison of weapon effectiveness can in principle be made only between similar types of weapons and ammunition.
We are aware that the weapons available for infantry applications which we compare below vary in their tactical employment for different types of engagements.
For some engagements such as harassing fire, support fire, assault preparation, etc., however different weapon systems can be employed.

- Engagement of an target area of 150x150m = 2,25 hectares
- Fire action of at most 20 sec duration, since after this time the enemy will have taken cover or will have traversed the target area
- Necessary weight of ammunition to cover the target area is about 50 shells calibre 105mm per hectare (weight of shell = ca. 15kp)

DATA	Oerlikon Rocket Launchers 81 mm	Howitzer 105 mm	Mortar 81 mm	Mortar 120 mm
• Number of barrels per weapon	30	1	1	1
• Rate of fire per weapon within 20 sec	30	4	8	4
• Maximum practical range km	8	10	3,5	5
• Minimum practical range km	2,5	2	0,1	0,5
• Ammunition weight kp	16	20	4	14
• Shell weight kp	7	15	4	14
• Number of shells required ca.	240	110	280	120
• Number of weapon required	8	28	35	30
• Carrying (trucking) vehicle	ev. M113	truck – ev. AMX13 – truck 6-7 AMX13 = 16	small weapon carrier	ev. M113
• Vehicle weight in action tons	11		0,4	ev. 11
• Personnel per vehicle	3	4	4	4
• Total personnel on the weapons	24	112	140	120
• Number of weapons actually available for normal tactical engagements	8 (1 Battery)	18 (1 Group)	6-8 (2 Platoons)	6-8 (1 Battery)
• Time actually required for barrage fire with the above number of tactically available weapons	6	31	116	45

The cost-relationship between guns and rockets can be found in the appropriate literature and is given in the figure below.
The precise data depend on the country, application of weapon and permissible rate of fire. It can be seen nevertheless that the higher logistic support volume and the inherently higher rocket price can be offset by:

- Inexpensive launcher equipment
- Reduced number of vehicles required for each engagement and therefore lower maintenance costs
- Less operating personnel and therefore:
  Reduced transport, food and accommodation expenses etc.

The advantages of rockets for the effective engagement of area-targets are evident. The introduction in great numbers of rockets into the mechanised modern armies is expected in the near future.

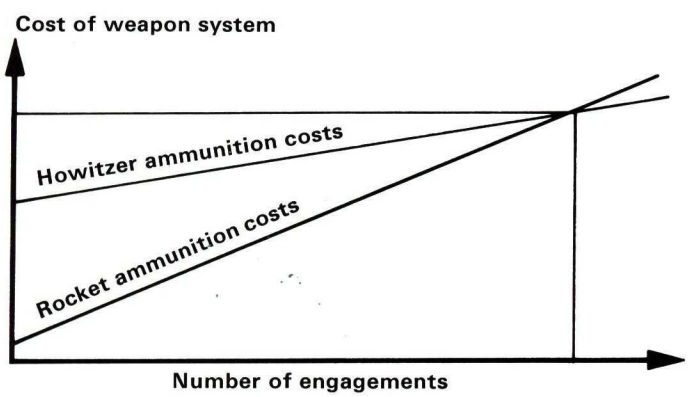

All changes of specifications reserved

Machine Tool Works Oerlikon-Bührle Ltd., CH-8050 Zurich/Switzerland

WWW 500030 E 1975

Printed in Switzerland